SEQN: 10059 / T2 / GABL FROM:	Ply: 1 Qty: 1 Wgt: 176.4 lbs	**Job Number:** Q36970 **Truss Label:** GE1	DRW: ... / ... 01/17/2022

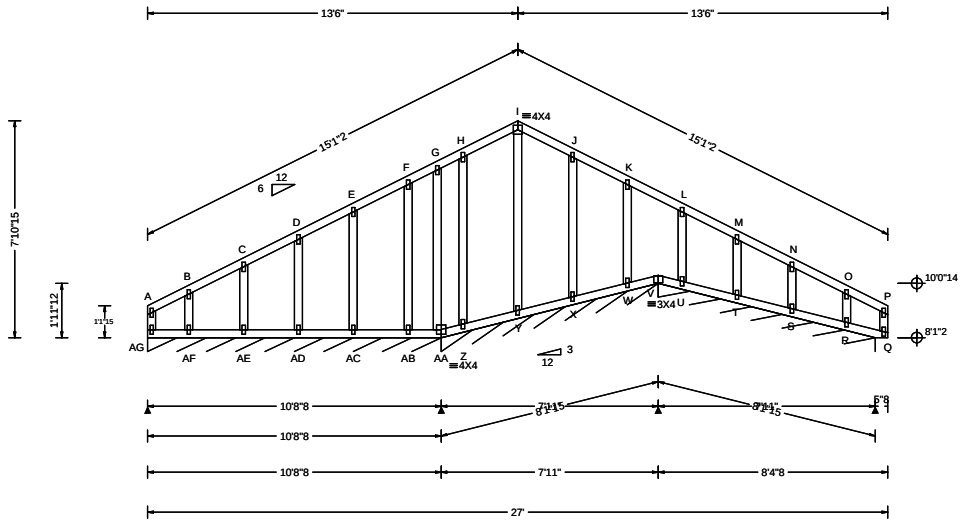

Loading Criteria (psf)
TCLL: 20.00
TCDL: 10.00
BCLL: 0.00
BCDL: 10.00
Des Ld: 40.00
NCBCLL: 10.00 Soffit: 2.00
Load Duration: 1.15
Spacing: 24.0 "

Wind Criteria
Wind Std: ASCE 7-16 Speed: 120 mph
Enclosure: Closed Risk Category: II
TCDL: 5.0 psf BCDL: 5.0 psf EXP: C
Mean Height: 15.00 ft Kzt: NA
MWFRS Parallel Dist: 0 to h/2
C&C Dist a: 3.00 ft
Loc. from endwall: Any
GCpi: 0.18
Wind Duration: 1.60

Snow Criteria
(Pg,Pf in PSF)
Pg: 15.0 Ct: 1.1
Pf: 11.6
CAT: II Ce: 1.0
Lu: - Cs: 1.00
Snow Duration: 1.15

Building Code:
IBC 2021 Res
TPI Std: 2014
Rep Fac: Yes
FT/RT:20(0)/10(0)
Plate Type:
WAVE

Defl/CSI Criteria

PP Deflection in	loc	L/defl	L/#		
VERT(LL): 0.002	O	999	240	Max TC CSI:	0.054
VERT(CL): 0.004	O	999	240	Max BC CSI:	0.054
HORZ(LL): -0.023	E	-	-	Max Web CSI:	0.116
HORZ(TL): 0.042	E	-	-	Creep Factor: 2.0	

Mfg Specified Camber:

VIEW Ver: 21.01.03A.0805.14

Lumber
Top chord: 2x4 SPF #1/#2;
Bot chord: 2x4 SPF #1/#2;
Webs: 2x4 SPF #1/#2;

Bracing
Fasten rated sheathing to one face of this frame.

Plating Notes
All plates are 1.5X4 except as noted.

Loading
Gable end supports 8" max rake overhang. Top chord must not be cut or notched.
Bottom chord checked for 10.00 psf non-concurrent live load.
Truss designed for unbalanced snow loads.

Wind
Wind loads based on MWFRS with additional C&C member design.
End verticals not exposed to wind pressure.
Right cantilever is exposed to wind
Wind loading based on both gable and hip roof types.

Additional Notes
See DWGS A12015ENC160118, GBLLETIN0118, & GABRST160118 for gable wind bracing and other requirements.
Shim all supports to solid bearing.

▲Maximum Reactions (lbs), or *=PLF

Loc	Gravity R+	/ R-	/ Rh	Non-Gravity / Rw	/ U	/ RL
AG*83	/-	/-		/53	/16	/14
AA*83	/-	/-		/43	/-	/-
V* 87	/-	/-		/57	/18	/-

Wind reactions based on MWFRS
AG Brg Width = 128 Min Req = -
AA Brg Width = 95.0 Min Req = -
V Brg Width = 95.0 Min Req = -
Bearings AG, AA, & V are a rigid surface.

Maximum Top Chord Forces Per Ply (lbs)

Chords	Tens.	Comp.	Chords	Tens.	Comp.
A - B	103	- 97	I - J	304	- 25
B - C	86	- 75	J - K	252	- 16
C - D	113	- 66	K - L	203	- 26
D - E	160	- 54	L - M	157	- 40
E - F	209	- 41	M - N	112	- 53
F - G	244	- 33	N - O	71	- 62
G - H	263	- 18	O - P	83	- 85
H - I	306	- 25			

Maximum Bot Chord Forces Per Ply (lbs)

Chords	Tens.	Comp.	Chords	Tens.	Comp.
AG-AF	77	- 75	Y - X	75	- 81
AF-AE	80	- 79	X - W	74	- 81
AE-AD	80	- 81	W - V	73	- 79
AD-AC	81	- 82	V - U	72	- 78
AC-AB	81	- 83	U - T	73	- 78
AB-AA	82	- 84	T - S	72	- 74
AA- Z	75	- 77	S - R	71	- 71
Z - Y	75	- 81	R - Q	62	- 55

Maximum Gable Forces Per Ply (lbs)

Gables	Tens.	Comp.	Gables	Tens.	Comp.
A -AG	60	- 71	I - Y	0	- 189
B -AF	92	- 116	X - J	143	- 164
C -AE	89	- 125	W - K	89	- 122
D -AD	87	- 123	U - L	86	- 123
E -AC	91	- 129	T - M	86	- 121
F -AB	69	- 94	S - N	89	- 125
G -AA	50	- 57	R - O	88	- 109
H - Z	112	- 129	P - Q	53	- 68

****WARNING**** READ AND FOLLOW ALL NOTES ON THIS DRAWING!
****IMPORTANT**** FURNISH THIS DRAWING TO ALL CONTRACTORS INCLUDING THE INSTALLERS

Trusses require extreme care in fabricating, handling, shipping, installing and bracing. Refer to and follow the latest edition of BCSI (Building Component Safety Information, by TPI and SBCA) for safety practices prior to performing these functions. Installers shall provide temporary bracing per BCSI. Unless noted otherwise, top chord shall have properly attached structural sheathing and bottom chord shall have a properly attached rigid ceiling. Locations shown for permanent lateral restraint of webs shall have bracing installed per BCSI sections B3, B7, or B10, as applicable. Apply plates to each face of truss and position as shown above and on the Joint Details, unless noted otherwise. Refer to drawings 160A-Z for standard plate positions.

Alpine, a division of ITW Building Components Group Inc. shall not be responsible for any deviation from this drawing, any failure to build the truss in conformance with ANSI/TPI 1, or for handling, shipping, installation and bracing of trusses. A seal on this drawing or cover page listing this drawing, indicates acceptance of professional engineering responsibility solely for the design shown. The suitability and use of this drawing for any structure is the responsibility of the Building Designer per ANSI/TPI 1 Sec.2.

For more information see these web sites: Alpine: alpineitw.com; TPI: tpinst.org; SBCA: sbcindustry.com; ICC: iccsafe.org; AWC: awc.org

SEQN: 10044 / T1 / COMN FROM:	Ply: 1 Qty: 8 Wgt: 184.8 lbs	**Job Number:** Q36970 **Truss Label:** T1	DRW: ... / ... 01/17/2022

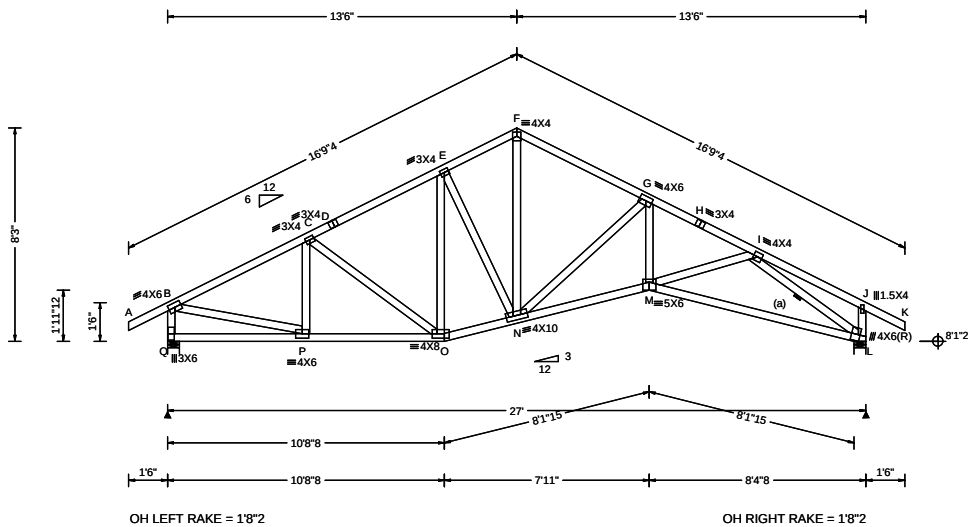

Loading Criteria (psf)
TCLL: 20.00
TCDL: 10.00
BCLL: 0.00
BCDL: 10.00
Des Ld: 40.00
NCBCLL: 10.00 Soffit: 2.00
Load Duration: 1.15
Spacing: 24.0 "

Wind Criteria
Wind Std: ASCE 7-16 Speed: 120 mph
Enclosure: Closed Risk Category: II
TCDL: 5.0 psf BCDL: 5.0 psf EXP: C
Mean Height: 15.00 ft Kzt: NA
MWFRS Parallel Dist: 0 to h/2
C&C Dist a: 3.00 ft
Loc. from endwall: Any
GCpi: 0.18
Wind Duration: 1.60

Snow Criteria
(Pg,Pf in PSF)
Pg: 15.0 Ct: 1.1
Pf: 11.6
CAT: II Ce: 1.0
Lu: - Cs: 1.00
Snow Duration: 1.15

Building Code:
IBC 2021 Res
TPI Std: 2014
Rep Fac: Yes
FT/RT:20(0)/10(0)
Plate Type:
WAVE

Defl/CSI Criteria

PP Deflection in	loc	L/defl	L/#		
VERT(LL): 0.095	M	999	240	Max TC CSI:	0.309
VERT(CL): 0.192	M	999	240	Max BC CSI:	0.745
HORZ(LL): 0.058	L	-	-	Max Web CSI:	0.976
HORZ(TL): 0.118	L	-	-	Creep Factor:	2.0

Mfg Specified Camber:

VIEW Ver: 21.01.03A.0805.14

Lumber
Top chord: 2x4 SPF #1/#2;
Bot chord: 2x4 SPF #1/#2;
Webs: 2x4 SPF #1/#2;

Bracing
(a) Continuous lateral restraint equally spaced on member.

Loading
Bottom chord checked for 10.00 psf non-concurrent live load.
Truss designed for unbalanced snow loads.

Wind
Wind loads based on MWFRS with additional C&C member design.
End verticals not exposed to wind pressure.
Wind loading based on both gable and hip roof types.

▲Maximum Reactions (lbs)

Loc	Gravity R+	Gravity / R-	Gravity / Rh	Non-Gravity / Rw	Non-Gravity / U	Non-Gravity / RL
Q	1215	/-	/-	/702	/138	/181
L	1219	/-	/-	/696	/140	/-

Wind reactions based on MWFRS
Q Brg Width = 5.5 Min Req = 1.9
L Brg Width = 5.5 Min Req = 1.8
Bearings Q & L are a rigid surface.

Maximum Top Chord Forces Per Ply (lbs)

Chords	Tens.	Comp.	Chords	Tens.	Comp.
A - B	45	0	F - G	521	-1246
B - C	476	-1480	G - H	684	-2155
C - D	492	-1320	H - I	673	-2219
D - E	513	-1293	I - J	97	-102
E - F	536	-1208	J - K	45	0

Maximum Bot Chord Forces Per Ply (lbs)

Chords	Tens.	Comp.	Chords	Tens.	Comp.
Q - P	191	-181	N - M	1988	-440
P - O	1271	-343	M - L	1689	-484
O - N	1150	-253			

Maximum Web Forces Per Ply (lbs)

Webs	Tens.	Comp.	Webs	Tens.	Comp.
B - Q	421	-1170	F - N	805	-307
B - P	1270	-320	N - G	368	-1185
P - C	135	-166	G - M	944	-145
C - O	126	-201	M - I	349	0
E - O	45	-75	I - L	606	-2039
E - N	158	-182	J - L	169	-254

****WARNING**** READ AND FOLLOW ALL NOTES ON THIS DRAWING!
****IMPORTANT**** FURNISH THIS DRAWING TO ALL CONTRACTORS INCLUDING THE INSTALLERS

Trusses require extreme care in fabricating, handling, shipping, installing and bracing. Refer to and follow the latest edition of BCSI (Building Component Safety Information, by TPI and SBCA) for safety practices prior to performing these functions. Installers shall provide temporary bracing per BCSI. Unless noted otherwise, top chord shall have properly attached structural sheathing and bottom chord shall have a properly attached rigid ceiling. Locations shown for permanent lateral restraint of webs shall have bracing installed per BCSI sections B3, B7, or B10, as applicable. Apply plates to each face of truss and position as shown above and on the Joint Details, unless noted otherwise. Refer to drawings 160A-Z for standard plate positions.

Alpine, a division of ITW Building Components Group Inc. shall not be responsible for any deviation from this drawing, any failure to build the truss in conformance with ANSI/TPI 1, or for handling, shipping, installation and bracing of trusses. A seal on this drawing or cover page listing this drawing, indicates acceptance of professional engineering responsibility solely for the design shown. The suitability and use of this drawing for any structure is the responsibility of the Building Designer per ANSI/TPI 1 Sec.2.

For more information see these web sites: Alpine: alpineitw.com; TPI: tpinst.org; SBCA: sbcindustry.com; ICC: iccsafe.org; AWC: awc.org

SEQN: 10041 / T3 / COMN FROM:	Ply: 1 Qty: 5 Wgt: 159.6 lbs	**Job Number:** Q36970 **Truss Label:** T1A	DRW: ... / ... 01/17/2022

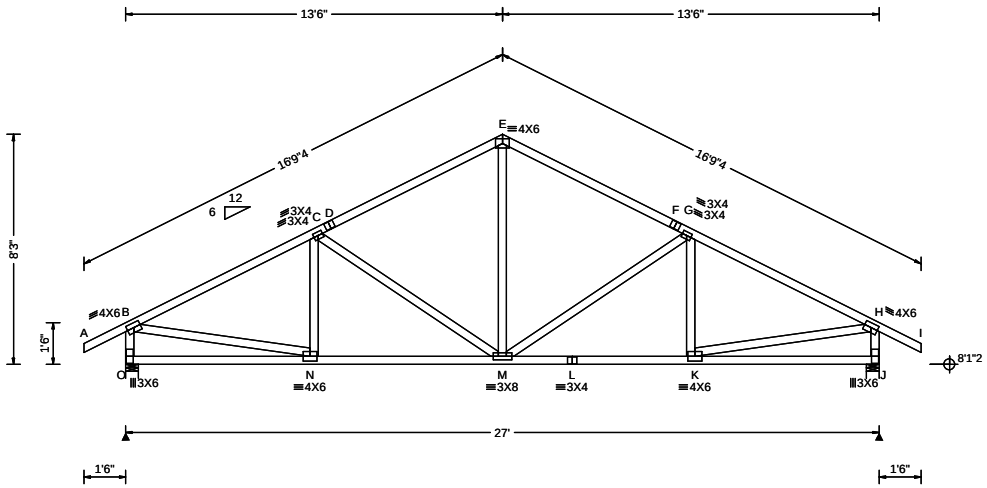

OH LEFT RAKE = 1'8"2

OH RIGHT RAKE = 1'8"2

Loading Criteria (psf)
TCLL: 20.00
TCDL: 10.00
BCLL: 0.00
BCDL: 10.00
Des Ld: 40.00
NCBCLL: 10.00 Soffit: 2.00
Load Duration: 1.15
Spacing: 24.0 "

Wind Criteria
Wind Std: ASCE 7-16 Speed: 120 mph
Enclosure: Closed Risk Category: II
TCDL: 5.0 psf BCDL: 5.0 psf EXP: C
Mean Height: 15.00 ft Kzt: NA
MWFRS Parallel Dist: h to 2h
C&C Dist a: 3.00 ft
Loc. from endwall: not in 9.00 ft
GCpi: 0.18
Wind Duration: 1.60

Snow Criteria
(Pg,Pf in PSF)
Pg: 15.0 Ct: 1.1
Pf: 11.6
CAT: II Ce: 1.0
Lu: - Cs: 1.00
Snow Duration: 1.15

Building Code:
IBC 2021 Res
TPI Std: 2014
Rep Fac: Yes
FT/RT:20(0)/10(0)
Plate Type:
WAVE

Defl/CSI Criteria

PP Deflection in	loc	L/defl	L/#		
VERT(LL): 0.052	M	999	240	Max TC CSI:	0.503
VERT(CL): 0.104	M	999	240	Max BC CSI:	0.489
HORZ(LL): 0.015	J	-	-	Max Web CSI:	0.444
HORZ(TL): 0.030	J	-	-	Creep Factor:	2.0

Mfg Specified Camber:

VIEW Ver: 21.01.03A.0805.14

Lumber
Top chord: 2x4 SPF #1/#2;
Bot chord: 2x4 SPF #1/#2;
Webs: 2x4 SPF #1/#2;

Loading
Bottom chord checked for 10.00 psf non-concurrent live load.
Truss designed for unbalanced snow loads.

Wind
Wind loads based on MWFRS with additional C&C member design.
End verticals not exposed to wind pressure.
Wind loading based on both gable and hip roof types.

▲Maximum Reactions (lbs)

Loc	Gravity R+	/ R-	/ Rh	Non-Gravity / Rw	/ U	/ RL
O	1212	/-	/-	/697	/-	/179
J	1212	/-	/-	/697	/-	/-

Wind reactions based on MWFRS
O Brg Width = 5.5 Min Req = 1.9
J Brg Width = 5.5 Min Req = 1.9
Bearings O & J are a rigid surface.

Maximum Top Chord Forces Per Ply (lbs)

Chords	Tens.	Comp.	Chords	Tens.	Comp.
A - B	45	0	E - F	296	-1168
B - C	271	-1519	F - G	265	-1182
C - D	265	-1182	G - H	271	-1519
D - E	296	-1168	H - I	45	0

Maximum Bot Chord Forces Per Ply (lbs)

Chords	Tens.	Comp.	Chords	Tens.	Comp.
O - N	205	-180	L - K	1286	-153
N - M	1286	-152	K - J	49	-10
M - L	1286	-153			

Maximum Web Forces Per Ply (lbs)

Webs	Tens.	Comp.	Webs	Tens.	Comp.
B - O	270	-1155	M - G	136	-385
B - N	1253	-140	G - K	125	-78
N - C	125	-79	K - H	1254	-140
C - M	136	-385	H - J	270	-1155
E - M	596	-80			

****WARNING**** READ AND FOLLOW ALL NOTES ON THIS DRAWING!
****IMPORTANT**** FURNISH THIS DRAWING TO ALL CONTRACTORS INCLUDING THE INSTALLERS

Trusses require extreme care in fabricating, handling, shipping, installing and bracing. Refer to and follow the latest edition of BCSI (Building Component Safety Information, by TPI and SBCA) for safety practices prior to performing these functions. Installers shall provide temporary bracing per BCSI. Unless noted otherwise, top chord shall have properly attached structural sheathing and bottom chord shall have a properly attached rigid ceiling. Locations shown for permanent lateral restraint of webs shall have bracing installed per BCSI sections B3, B7, or B10, as applicable. Apply plates to each face of truss and position as shown above and on the Joint Details, unless noted otherwise. Refer to drawings 160A-Z for standard plate positions.

Alpine, a division of ITW Building Components Group Inc. shall not be responsible for any deviation from this drawing, any failure to build the truss in conformance with ANSI/TPI 1, or for handling, shipping, installation and bracing of trusses. A seal on this drawing or cover page listing this drawing, indicates acceptance of professional engineering responsibility solely for the design shown. The suitability and use of this drawing for any structure is the responsibility of the Building Designer per ANSI/TPI 1 Sec.2.

For more information see these web sites: Alpine: alpineitw.com; TPI: tpinst.org; SBCA: sbcindustry.com; ICC: iccsafe.org; AWC: awc.org

SEQN: 10079 / T15 / COMN FROM:	Ply: 3 Qty: 1 Wgt: 642.6 lbs	**Job Number:** Q36970 **Truss Label:** T1B	DRW: ... / ... 01/17/2022

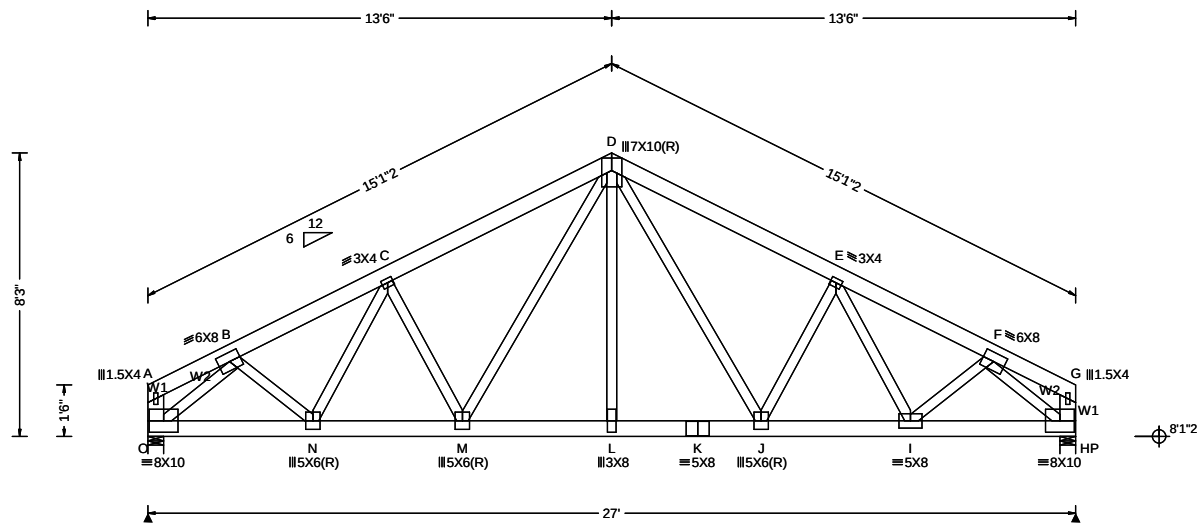

▲ Maximum Reactions (lbs)

Loc	Gravity R+	/ R-	/ Rh	Non-Gravity / Rw	/ U	/ RL
O	9228	/-	/-	/-	/1072	/-
P	9945	/-	/-	/-	/1148	/-

Wind reactions based on MWFRS
O Brg Width = 5.5 Min Req = 4.8
P Brg Width = 5.5 Min Req = 5.2
Bearings O & P are a rigid surface.

Maximum Top Chord Forces Per Ply (lbs)

Chords	Tens.	Comp.	Chords	Tens.	Comp.
A - B	20	- 165	D - E	473	- 4066
B - C	503	- 4351	E - F	506	- 4386
C - D	472	- 4057	F - G	21	- 183

Maximum Bot Chord Forces Per Ply (lbs)

Chords	Tens.	Comp.	Chords	Tens.	Comp.
O - N	2946	- 345	K - J	2935	- 340
N - M	3747	- 436	J - I	3764	- 438
M - L	2935	- 340	I - H	2974	- 348
L - K	2935	- 340			

Maximum Web Forces Per Ply (lbs)

Webs	Tens.	Comp.	Webs	Tens.	Comp.
A - O	18	- 137	D - J	1392	- 154
O - B	458	- 3894	J - E	50	- 327
B - N	1228	- 132	E - I	351	- 26
N - C	317	- 22	I - F	1234	- 132
C - M	47	- 306	F - H	460	- 3911
M - D	1377	- 152	G - H	19	- 145
D - L	1027	- 101			

Loading Criteria (psf)
TCLL: 20.00
TCDL: 10.00
BCLL: 0.00
BCDL: 10.00
Des Ld: 40.00
NCBCLL: 0.00 Soffit: 2.00
Load Duration: 1.15
Spacing: 24.0 "

Wind Criteria
Wind Std: ASCE 7-16 Speed: 120 mph
Enclosure: Closed Risk Category: II
TCDL: 5.0 psf BCDL: 5.0 psf EXP: C
Mean Height: 15.00 ft Kzt: NA
MWFRS Parallel Dist: 0 to h/2
C&C Dist a: 3.00 ft
Loc. from endwall: not in 9.00 ft
GCpi: 0.18
Wind Duration: 1.60

Snow Criteria
(Pg,Pf in PSF)
Pg: 15.0 Ct: 1.1
Pf: 11.6
CAT: II Ce: 1.0
Lu: - Cs: 1.00
Snow Duration: 1.15

Building Code:
IBC 2021 Res
TPI Std: 2014
Rep Fac: Yes
FT/RT:20(0)/10(0)
Plate Type:
WAVE

Defl/CSI Criteria

PP Deflection in	loc	L/defl	L/#		
VERT(LL): 0.098	J	999	240	Max TC CSI:	0.247
VERT(CL): 0.194	J	999	240	Max BC CSI:	0.945
HORZ(LL): 0.046	H	-	-	Max Web CSI:	0.454
HORZ(TL): 0.090	H	-	-	Creep Factor: 2.0	

Mfg Specified Camber:

VIEW Ver: 21.01.03A.0805.14

Lumber
Top chord: 2x6 SPF #1/#2;
Bot chord: 2x6 SPF #1/#2;
Webs: 2x4 SPF #1/#2; W1 2x6 SPF #1/#2;
W2 2x4 SPF 2100f-1.8E;

Nailnote
Nail Schedule:0.128"x3", min. nails
Top Chord: 1 Row @12.00" o.c.
Bot Chord: 2 Rows @ 3.50" o.c. (Each Row)
Webs : 1 Row @ 4" o.c.
Repeat nailing as each layer is applied. Use equal spacing between rows and stagger nails in each row to avoid splitting.

Special Loads
------(Lumber Dur.Fac.=1.15 / Plate Dur.Fac.=1.15)
TC: From 62 plf at 0.00 to 62 plf at 27.00
BC: From 10 plf at 0.00 to 10 plf at 27.00
BC: 1325 lb Conc. Load at 2.06, 4.06, 6.06, 8.06 10.06,12.06,14.06,16.06,18.06,20.06,22.06,24.06 26.06

Wind
Wind loads and reactions based on MWFRS.
End verticals not exposed to wind pressure.
Wind loading based on both gable and hip roof types.

****WARNING**** READ AND FOLLOW ALL NOTES ON THIS DRAWING!
****IMPORTANT**** FURNISH THIS DRAWING TO ALL CONTRACTORS INCLUDING THE INSTALLERS

Trusses require extreme care in fabricating, handling, shipping, installing and bracing. Refer to and follow the latest edition of BCSI (Building Component Safety Information, by TPI and SBCA) for safety practices prior to performing these functions. Installers shall provide temporary bracing per BCSI. Unless noted otherwise, top chord shall have properly attached structural sheathing and bottom chord shall have a properly attached rigid ceiling. Locations shown for permanent lateral restraint of webs shall have bracing installed per BCSI sections B3, B7, or B10, as applicable. Apply plates to each face of truss and position as shown above and on the Joint Details, unless noted otherwise. Refer to drawings 160A-Z for standard plate positions.

Alpine, a division of ITW Building Components Group Inc. shall not be responsible for any deviation from this drawing, any failure to build the truss in conformance with ANSI/TPI 1, or for handling, shipping, installation and bracing of trusses. A seal on this drawing or cover page listing this drawing, indicates acceptance of professional engineering responsibility solely for the design shown. The suitability and use of this drawing for any structure is the responsibility of the Building Designer per ANSI/TPI 1 Sec.2.

For more information see these web sites: Alpine: alpineitw.com; TPI: tpinst.org; SBCA: sbcindustry.com; ICC: iccsafe.org; AWC: awc.org

SEQN: 10052 / T6 / GABL FROM:	Ply: 1 Qty: 1 Wgt: 177.8 lbs	**Job Number:** Q36970 **Truss Label:** GE2	DRW: ... / ... 01/17/2022

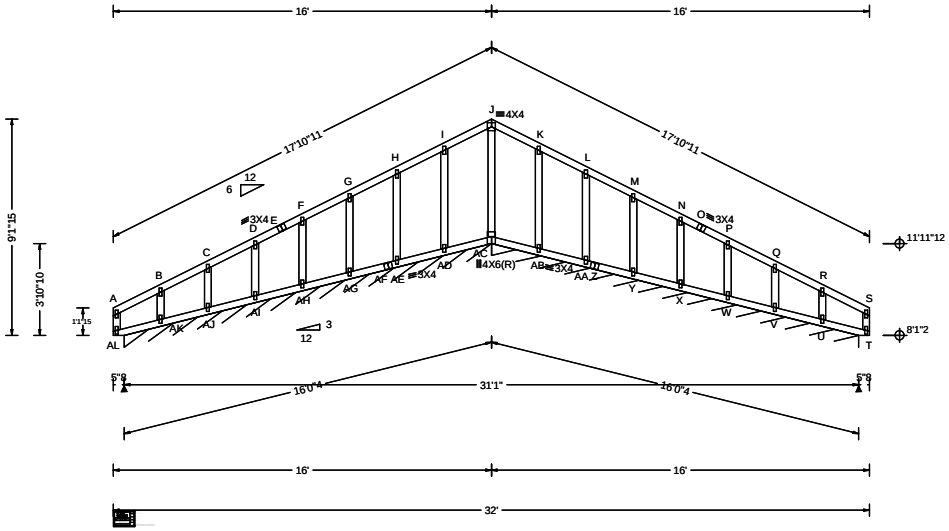

Loading Criteria (psf)	**Wind Criteria**	**Snow Criteria**	Building Code:	**Defl/CSI Criteria**
TCLL: 20.00 TCDL: 10.00 BCLL: 0.00 BCDL: 10.00 Des Ld: 40.00 NCBCLL: 10.00 Soffit: 2.00 Load Duration: 1.15 Spacing: 24.0 "	Wind Std: ASCE 7-16 Speed: 120 mph Enclosure: Closed Risk Category: II TCDL: 5.0 psf BCDL: 5.0 psf EXP: C Mean Height: 15.00 ft Kzt: NA MWFRS Parallel Dist: 0 to h/2 C&C Dist a: 3.20 ft Loc. from endwall: Any GCpi: 0.18 Wind Duration: 1.60	(Pg,Pf in PSF) Pg: 15.0 Ct: 1.1 Pf: 11.6 CAT: II Ce: 1.0 Lu: - Cs: 1.00 Snow Duration: 1.15	IBC 2021 Res TPI Std: 2014 Rep Fac: Yes FT/RT:20(0)/10(0) Plate Type: WAVE	PP Deflection in loc L/defl L/# VERT(LL): 0.002 B 999 240 Max TC CSI: 0.064 VERT(CL): 0.006 B 999 240 Max BC CSI: 0.065 HORZ(LL): 0.030 S - - Max Web CSI: 0.100 HORZ(TL): 0.056 S - - Creep Factor: 2.0 Mfg Specified Camber: VIEW Ver: 21.01.03A.0805.14

Lumber

Top chord: 2x4 SPF #1/#2;
Bot chord: 2x4 SPF #1/#2;
Webs: 2x4 SPF #1/#2;

Bracing

Fasten rated sheathing to one face of this frame.

Plating Notes

All plates are 1.5X4 except as noted.

Loading

Gable end supports 8" max rake overhang. Top chord must not be cut or notched.

Bottom chord checked for 10.00 psf non-concurrent live load.

Truss designed for unbalanced snow loads.

Wind

Wind loads based on MWFRS with additional C&C member design.

End verticals not exposed to wind pressure.

Left and right cantilevers are exposed to wind

Wind loading based on both gable and hip roof types.

Additional Notes

See DWGS A12015ENC160118, GBLLETIN0118, & GABRST160118 for gable wind bracing and other requirements.

▲Maximum Reactions (lbs), or *=PLF

Loc	Gravity R+	/ R-	/ Rh	Non-Gravity / Rw	/ U	/ RL
AL*	90	/-	/-	/59	/3	/11
AC*	80	/-	/-	/54	/16	/-

Wind reactions based on MWFRS
AL Brg Width = 186 Min Req = -
AC Brg Width = 186 Min Req = -
Bearings AL & AC are a rigid surface.

Maximum Top Chord Forces Per Ply (lbs)

Chords	Tens.	Comp.	Chords	Tens.	Comp.
A - B	111	- 108	J - K	367	- 18
B - C	99	- 82	K - L	317	- 19
C - D	123	- 74	L - M	269	- 30
D - E	164	- 60	M - N	222	- 42
E - F	168	- 52	N - O	175	- 47
F - G	214	- 48	O - P	167	- 55
G - H	261	- 35	P - Q	129	- 68
H - I	308	- 24	Q - R	93	- 76
I - J	358	- 18	R - S	105	- 102

Maximum Bot Chord Forces Per Ply (lbs)

Chords	Tens.	Comp.	Chords	Tens.	Comp.
AL-AK	112	- 104	AC-AB	94	- 105
AK-AJ	99	- 99	AB-AA	93	- 102
AJ-AI	98	- 102	AA- Z	91	- 96
AI-AH	97	- 102	Z - Y	92	- 100
AH-AG	96	- 103	Y - X	91	- 99
AG-AF	94	- 103	X - W	90	- 96
AF-AE	94	- 99	W - V	89	- 93
AE-AD	95	- 104	V - U	90	- 91
AD-AC	94	- 105	U - T	81	- 74

Maximum Gable Forces Per Ply (lbs)

Gables	Tens.	Comp.	Gables	Tens.	Comp.
A -AL	59	- 79	AB- K	146	- 163
B -AK	102	- 130	AA- L	91	- 120
C -AJ	86	- 120	Y - M	86	- 123
D -AI	87	- 123	X - N	87	- 123
F -AH	87	- 123	W - P	87	- 123
G -AG	86	- 123	V - Q	85	- 120
H -AE	91	- 120	U - R	102	- 130
I -AD	146	- 163	S - T	55	- 75
J -AC	0	- 261			

****WARNING**** READ AND FOLLOW ALL NOTES ON THIS DRAWING!
****IMPORTANT**** FURNISH THIS DRAWING TO ALL CONTRACTORS INCLUDING THE INSTALLERS

Trusses require extreme care in fabricating, handling, shipping, installing and bracing. Refer to and follow the latest edition of BCSI (Building Component Safety Information, by TPI and SBCA) for safety practices prior to performing these functions. Installers shall provide temporary bracing per BCSI. Unless noted otherwise, top chord shall have properly attached structural sheathing and bottom chord shall have a properly attached rigid ceiling. Locations shown for permanent lateral restraint of webs shall have bracing installed per BCSI sections B3, B7, or B10, as applicable. Apply plates to each face of truss and position as shown above and on the Joint Details, unless noted otherwise. Refer to drawings 160A-Z for standard plate positions.

Alpine, a division of ITW Building Components Group Inc. shall not be responsible for any deviation from this drawing, any failure to build the truss in conformance with ANSI/TPI 1, or for handling, shipping, installation and bracing of trusses. A seal on this drawing or cover page listing this drawing, indicates acceptance of professional engineering responsibility solely for the design shown. The suitability and use of this drawing for any structure is the responsibility of the Building Designer per ANSI/TPI 1 Sec.2.

For more information see these web sites: Alpine: alpineitw.com; TPI: tpinst.org; SBCA: sbcindustry.com; ICC: iccsafe.org; AWC: awc.org

SEQN: 10033 / T5 / COMN FROM:	Ply: 1 Qty: 13 Wgt: 180.6 lbs	**Job Number:** Q36970 **Truss Label:** T2	DRW: ... / ... 01/17/2022

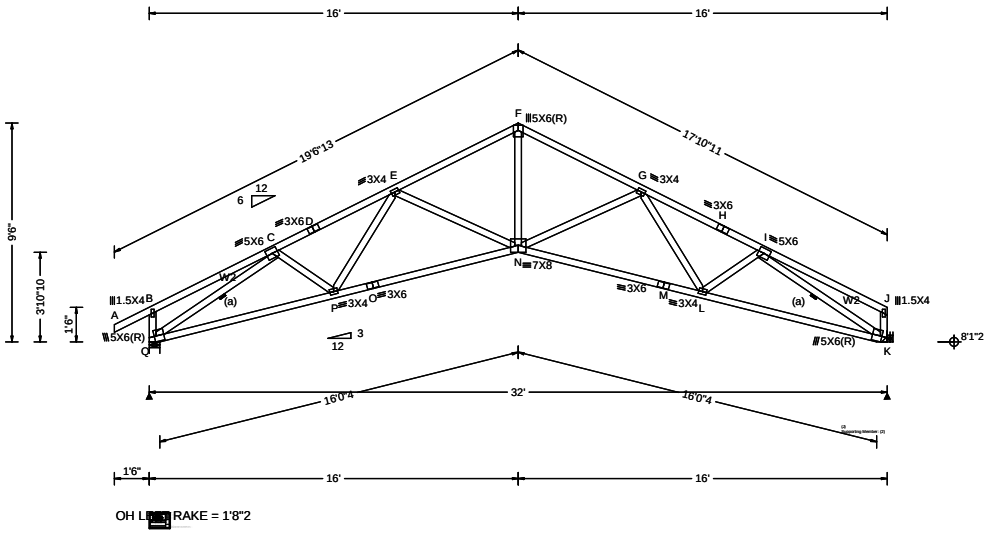

▲ Maximum Reactions (lbs)

Loc	Gravity R+	/ R-	/ Rh	Non-Gravity / Rw	/ U	/ RL
Q	1429	/-	/-	/820	/161	/196
K	1325	/-	/-	/744	/142	/-

Wind reactions based on MWFRS
Q Brg Width = 5.5 Min Req = 2.1
K Brg Width = - Min Req = -
Bearing Q is a rigid surface.

Maximum Top Chord Forces Per Ply (lbs)

Chords	Tens.	Comp.	Chords	Tens.	Comp.
A - B	45	0	F - G	786	- 2352
B - C	119	- 118	G - H	877	- 2724
C - D	851	- 2759	H - I	860	- 2775
D - E	868	- 2708	I - J	78	- 122
E - F	764	- 2352			

Maximum Bot Chord Forces Per Ply (lbs)

Chords	Tens.	Comp.	Chords	Tens.	Comp.
Q - P	2321	- 720	N - M	2491	- 639
P - O	2454	- 674	M - L	2460	- 643
O - N	2486	- 670	L - K	2347	- 701

Maximum Web Forces Per Ply (lbs)

Webs	Tens.	Comp.	Webs	Tens.	Comp.
B - Q	190	- 280	F - N	1701	- 459
Q - C	781	- 2731	G - L	188	- 33
C - P	286	0	L - I	280	0
P - E	182	- 10	I - K	830	- 2750
E - N	269	- 397	J - K	99	- 170
N - G	272	- 403			

Loading Criteria (psf)
TCLL: 20.00
TCDL: 10.00
BCLL: 0.00
BCDL: 10.00
Des Ld: 40.00
NCBCLL: 10.00 Soffit: 2.00
Load Duration: 1.15
Spacing: 24.0 "

Wind Criteria
Wind Std: ASCE 7-16 Speed: 120 mph
Enclosure: Closed Risk Category: II
TCDL: 5.0 psf BCDL: 5.0 psf EXP: C
Mean Height: 15.00 ft Kzt: NA
MWFRS Parallel Dist: 0 to h/2
C&C Dist a: 3.20 ft
Loc. from endwall: Any
GCpi: 0.18
Wind Duration: 1.60

Snow Criteria
(Pg,Pf in PSF)
Pg: 15.0 Ct: 1.1
Pf: 11.6
CAT: II Ce: 1.0
Lu: - Cs: 1.00
Snow Duration: 1.15

Building Code:
IBC 2021 Res
TPI Std: 2014
Rep Fac: Yes
FT/RT:20(0)/10(0)
Plate Type:
WAVE

Defl/CSI Criteria

PP Deflection in	loc	L/defl	L/#		
VERT(LL): 0.186	N	999	240	Max TC CSI:	0.370
VERT(CL): 0.383	N	999	240	Max BC CSI:	0.816
HORZ(LL): 0.158	K	-	-	Max Web CSI:	0.417
HORZ(TL): 0.325	K	-	-	Creep Factor:	2.0

Mfg Specified Camber:

VIEW Ver: 21.01.03A.0805.14

Lumber
Top chord: 2x4 SPF #1/#2;
Bot chord: 2x4 SPF #1/#2;
Webs: 2x4 SPF #1/#2; W2 2x4 SPF 2100f-1.8E;

Bracing
(a) Continuous lateral restraint equally spaced on member.

Hangers / Ties
(J) Hanger Support Required, by others

Loading
Bottom chord checked for 10.00 psf non-concurrent live load.
Truss designed for unbalanced snow loads.

Wind
Wind loads based on MWFRS with additional C&C member design.
End verticals not exposed to wind pressure.
Wind loading based on both gable and hip roof types.

****WARNING**** READ AND FOLLOW ALL NOTES ON THIS DRAWING!
****IMPORTANT**** FURNISH THIS DRAWING TO ALL CONTRACTORS INCLUDING THE INSTALLERS

Trusses require extreme care in fabricating, handling, shipping, installing and bracing. Refer to and follow the latest edition of BCSI (Building Component Safety Information, by TPI and SBCA) for safety practices prior to performing these functions. Installers shall provide temporary bracing per BCSI. Unless noted otherwise, top chord shall have properly attached structural sheathing and bottom chord shall have a properly attached rigid ceiling. Locations shown for permanent lateral restraint of webs shall have bracing installed per BCSI sections B3, B7, or B10, as applicable. Apply plates to each face of truss and position as shown above and on the Joint Details, unless noted otherwise. Refer to drawings 160A-Z for standard plate positions.

Alpine, a division of ITW Building Components Group Inc. shall not be responsible for any deviation from this drawing, any failure to build the truss in conformance with ANSI/TPI 1, or for handling, shipping, installation and bracing of trusses. A seal on this drawing or cover page listing this drawing, indicates acceptance of professional engineering responsibility solely for the design shown. The suitability and use of this drawing for any structure is the responsibility of the Building Designer per ANSI/TPI 1 Sec.2.

For more information see these web sites: Alpine: alpineitw.com; TPI: tpinst.org; SBCA: sbcindustry.com; ICC: iccsafe.org; AWC: awc.org

SEQN: 10055 / T7 / COMN FROM:	Ply: 1 Qty: 1 Wgt: 180.6 lbs	**Job Number:** Q36970 **Truss Label:** T2A	DRW: ... / ... 01/17/2022

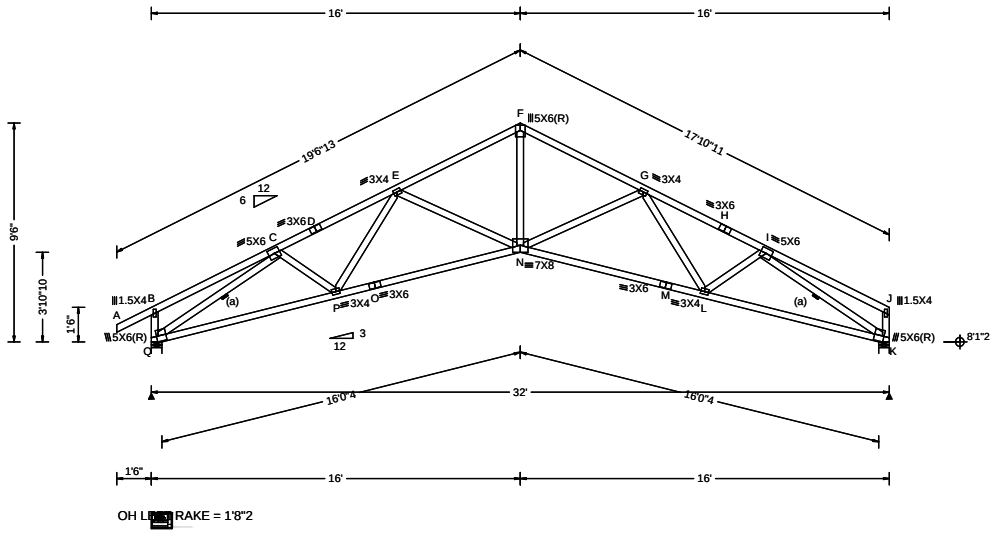

Loading Criteria (psf)
TCLL: 20.00
TCDL: 10.00
BCLL: 0.00
BCDL: 10.00
Des Ld: 40.00
NCBCLL: 10.00 Soffit: 2.00
Load Duration: 1.15
Spacing: 24.0 "

Wind Criteria
Wind Std: ASCE 7-16 Speed: 120 mph
Enclosure: Closed Risk Category: II
TCDL: 5.0 psf BCDL: 5.0 psf EXP: C
Mean Height: 15.00 ft Kzt: NA
MWFRS Parallel Dist: h/2 to h
C&C Dist a: 3.20 ft
Loc. from endwall: not in 4.50 ft
GCpi: 0.18
Wind Duration: 1.60

Snow Criteria
(Pg,Pf in PSF)
Pg: 15.0 Ct: 1.1
Pf: 11.6
CAT: II Ce: 1.0
Lu: - Cs: 1.00
Snow Duration: 1.15

Building Code:
IBC 2021 Res
TPI Std: 2014
Rep Fac: Yes
FT/RT:20(0)/10(0)
Plate Type:
WAVE

Defl/CSI Criteria

PP Deflection in	loc	L/defl	L/#		
VERT(LL): 0.194	N	999	240	Max TC CSI:	0.355
VERT(CL): 0.400	N	960	240	Max BC CSI:	0.815
HORZ(LL): 0.162	K	-	-	Max Web CSI:	0.621
HORZ(TL): 0.333	K	-	-	Creep Factor:	2.0

Mfg Specified Camber:

VIEW Ver: 21.01.03A.0805.14

Lumber
Top chord: 2x4 SPF #1/#2;
Bot chord: 2x4 SPF #1/#2;
Webs: 2x4 SPF #1/#2;

Bracing
(a) Continuous lateral restraint equally spaced on member.

Loading
Bottom chord checked for 10.00 psf non-concurrent live load.
Truss designed for unbalanced snow loads.

Wind
Wind loads based on MWFRS with additional C&C member design.
End verticals not exposed to wind pressure.
Wind loading based on both gable and hip roof types.

▲Maximum Reactions (lbs)

Loc	Gravity R+	Gravity / R-	Gravity / Rh	Non-Gravity / Rw	Non-Gravity / U	Non-Gravity / RL
Q	1430	/-	/-	/820	/161	/196
K	1325	/-	/-	/744	/142	/-

Wind reactions based on MWFRS
Q Brg Width = 5.5 Min Req = 2.1
K Brg Width = 5.5 Min Req = 2.0
Bearings Q & K are a rigid surface.

Maximum Top Chord Forces Per Ply (lbs)

Chords	Tens.	Comp.	Chords	Tens.	Comp.
A - B	45	0	F - G	385	- 2353
B - C	109	- 123	G - H	416	- 2724
C - D	393	- 2760	H - I	398	- 2776
D - E	411	- 2708	I - J	64	- 127
E - F	371	- 2354			

Maximum Bot Chord Forces Per Ply (lbs)

Chords	Tens.	Comp.	Chords	Tens.	Comp.
Q - P	2320	- 339	N - M	2493	- 267
P - O	2456	- 292	M - L	2461	- 271
O - N	2487	- 288	L - K	2346	- 325

Maximum Web Forces Per Ply (lbs)

Webs	Tens.	Comp.	Webs	Tens.	Comp.
B - Q	183	- 283	F - N	1703	- 188
Q - C	350	- 2726	G - L	188	- 33
C - P	288	0	L - I	282	0
P - E	181	- 10	I - K	383	- 2745
E - N	163	- 397	J - K	78	- 173
N - G	164	- 403			

****WARNING**** READ AND FOLLOW ALL NOTES ON THIS DRAWING!
****IMPORTANT**** FURNISH THIS DRAWING TO ALL CONTRACTORS INCLUDING THE INSTALLERS

Trusses require extreme care in fabricating, handling, shipping, installing and bracing. Refer to and follow the latest edition of BCSI (Building Component Safety Information, by TPI and SBCA) for safety practices prior to performing these functions. Installers shall provide temporary bracing per BCSI. Unless noted otherwise, top chord shall have properly attached structural sheathing and bottom chord shall have a properly attached rigid ceiling. Locations shown for permanent lateral restraint of webs shall have bracing installed per BCSI sections B3, B7, or B10, as applicable. Apply plates to each face of truss and position as shown above and on the Joint Details, unless noted otherwise. Refer to drawings 160A-Z for standard plate positions.

Alpine, a division of ITW Building Components Group Inc. shall not be responsible for any deviation from this drawing, any failure to build the truss in conformance with ANSI/TPI 1, or for handling, shipping, installation and bracing of trusses. A seal on this drawing or cover page listing this drawing, indicates acceptance of professional engineering responsibility solely for the design shown. The suitability and use of this drawing for any structure is the responsibility of the Building Designer per ANSI/TPI 1 Sec.2.

For more information see these web sites: Alpine: alpineitw.com; TPI: tpinst.org; SBCA: sbcindustry.com; ICC: iccsafe.org; AWC: awc.org

SEQN: 10081 / T8 / COMN FROM:	Ply: 1 Qty: 2 Wgt: 180.6 lbs	**Job Number:** Q36970 **Truss Label:** T2B	DRW: ... / ... 01/17/2022

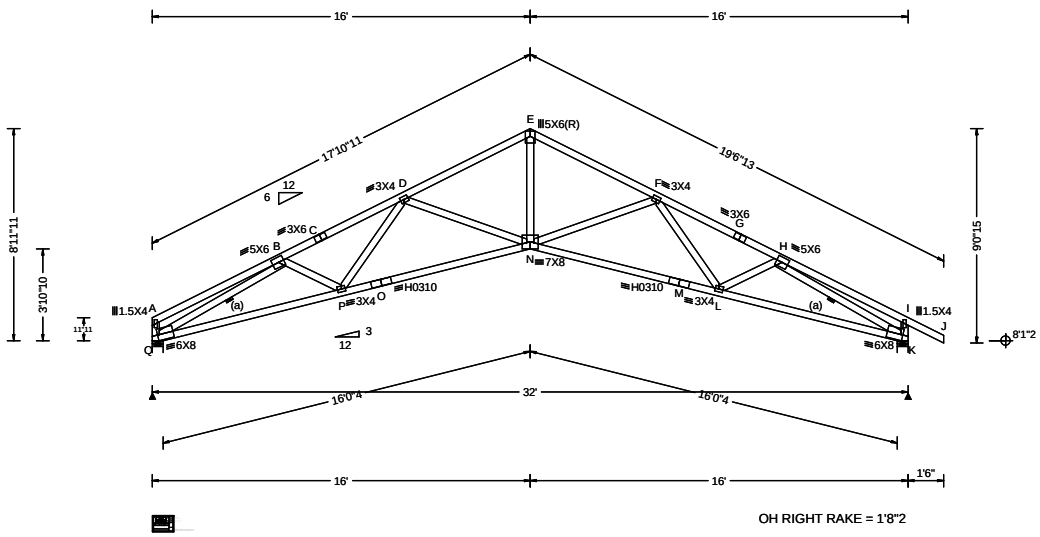

OH RIGHT RAKE = 1'8"2

▲ Maximum Reactions (lbs)

Loc	Gravity R+	Gravity / R-	Gravity / Rh	Non-Gravity / Rw	Non-Gravity / U	Non-Gravity / RL
Q	1325	/-	/-	/747	/141	/196
K	1429	/-	/-	/823	/162	/-

Wind reactions based on MWFRS

Q Brg Width = 5.5 Min Req = 2.0

K Brg Width = 5.5 Min Req = 2.1

Bearings Q & K are a rigid surface.

Maximum Top Chord Forces Per Ply (lbs)

Chords	Tens.	Comp.	Chords	Tens.	Comp.
A - B	70	-197	F - G	421	-3201
B - C	410	-3271	G - H	404	-3252
C - D	427	-3219	H - I	106	-185
D - E	357	-2602	I - J	45	0
E - F	355	-2602			

Maximum Bot Chord Forces Per Ply (lbs)

Chords	Tens.	Comp.	Chords	Tens.	Comp.
Q - P	2914	-343	N - M	2861	-247
P - O	2836	-250	M - L	2829	-251
O - N	2867	-246	L - K	2881	-338

Maximum Web Forces Per Ply (lbs)

Webs	Tens.	Comp.	Webs	Tens.	Comp.
A - Q	81	-208	E - N	1926	-163
Q - B	417	-3205	F - L	307	-13
B - P	194	-10	L - H	201	-24
P - D	314	0	H - K	384	-3187
D - N	188	-539	I - K	182	-315
N - F	187	-532			

Loading Criteria (psf)

TCLL: 20.00
TCDL: 10.00
BCLL: 0.00
BCDL: 10.00
Des Ld: 40.00
NCBCLL: 10.00 Soffit: 2.00
Load Duration: 1.15
Spacing: 24.0 "

Wind Criteria

Wind Std: ASCE 7-16 Speed: 120 mph
Enclosure: Closed Risk Category: II
TCDL: 5.0 psf BCDL: 5.0 psf EXP: C
Mean Height: 15.00 ft Kzt: NA
MWFRS Parallel Dist: 0 to h/2
C&C Dist a: 3.20 ft
Loc. from endwall: not in 4.50 ft
GCpi: 0.18
Wind Duration: 1.60

Snow Criteria

(Pg,Pf in PSF)
Pg: 15.0 Ct: 1.1
Pf: 11.6
CAT: II Ce: 1.0
Lu: - Cs: 1.00
Snow Duration: 1.15

Building Code:
IBC 2021 Res
TPI Std: 2014
Rep Fac: Yes
FT/RT:20(0)/10(0)
Plate Type:
WAVE, HS

Defl/CSI Criteria

PP Deflection in	loc	L/defl	L/#		
VERT(LL): 0.262	N	999	240	Max TC CSI:	0.415
VERT(CL): 0.539	N	712	240	Max BC CSI:	0.890
HORZ(LL): 0.209	K	-	-	Max Web CSI:	0.686
HORZ(TL): 0.429	K	-	-	Creep Factor:	2.0

Mfg Specified Camber:

VIEW Ver: 21.01.03A.0805.14

Lumber

Top chord: 2x4 SPF #1/#2;
Bot chord: 2x4 SPF #1/#2;
Webs: 2x4 SPF #1/#2;

Bracing

(a) Continuous lateral restraint equally spaced on member.

Loading

Bottom chord checked for 10.00 psf non-concurrent live load.

Truss designed for unbalanced snow loads.

Wind

Wind loads based on MWFRS with additional C&C member design.

End verticals not exposed to wind pressure.

Wind loading based on both gable and hip roof types.

****WARNING**** READ AND FOLLOW ALL NOTES ON THIS DRAWING!
****IMPORTANT**** FURNISH THIS DRAWING TO ALL CONTRACTORS INCLUDING THE INSTALLERS

Trusses require extreme care in fabricating, handling, shipping, installing and bracing. Refer to and follow the latest edition of BCSI (Building Component Safety Information, by TPI and SBCA) for safety practices prior to performing these functions. Installers shall provide temporary bracing per BCSI. Unless noted otherwise, top chord shall have properly attached structural sheathing and bottom chord shall have a properly attached rigid ceiling. Locations shown for permanent lateral restraint of webs shall have bracing installed per BCSI sections B3, B7, or B10, as applicable. Apply plates to each face of truss and position as shown above and on the Joint Details, unless noted otherwise. Refer to drawings 160A-Z for standard plate positions.

Alpine, a division of ITW Building Components Group Inc. shall not be responsible for any deviation from this drawing, any failure to build the truss in conformance with ANSI/TPI 1, or for handling, shipping, installation and bracing of trusses. A seal on this drawing or cover page listing this drawing, indicates acceptance of professional engineering responsibility solely for the design shown. The suitability and use of this drawing for any structure is the responsibility of the Building Designer per ANSI/TPI 1 Sec.2.

For more information see these web sites: Alpine: alpineitw.com; TPI: tpinst.org; SBCA: sbcindustry.com; ICC: iccsafe.org; AWC: awc.org

SEQN: 10063 / T14 / VAL FROM:	Ply: 1 Qty: 1 Wgt: 98.0 lbs	**Job Number:** Q36970 **Truss Label:** V1	DRW: ... / ... 01/17/2022

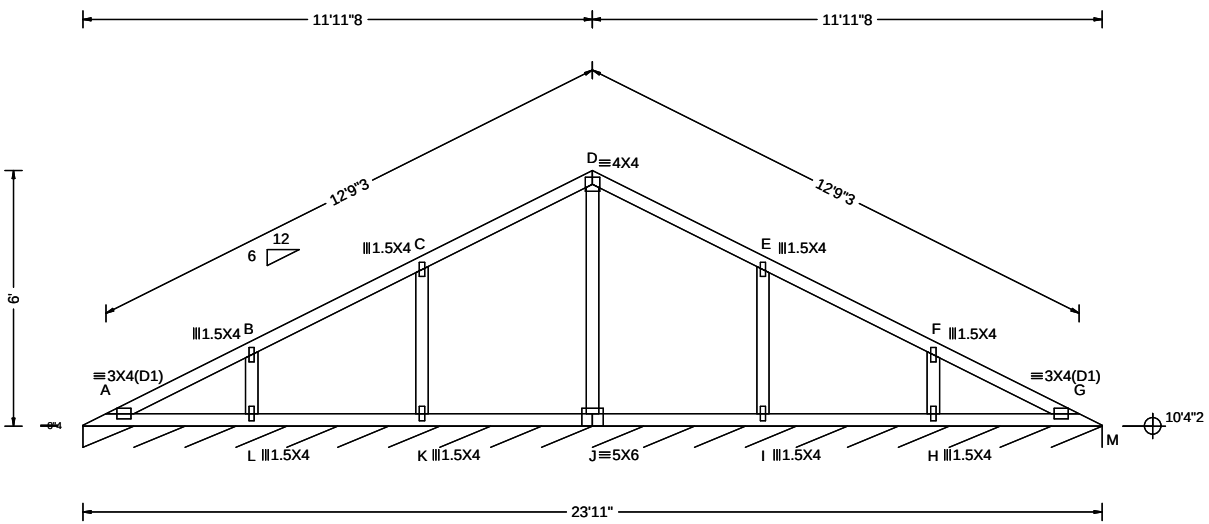

▲ Maximum Reactions (lbs), or *=PLF

Loc	Gravity R+	/ R-	/ Rh	Non-Gravity / Rw	/ U	/ RL
M*	82	/-	/-	/42	/-	/5

Wind reactions based on MWFRS
M Brg Width = 287 Min Req = -
Bearing A is a rigid surface.

Maximum Top Chord Forces Per Ply (lbs)

Chords	Tens.	Comp.	Chords	Tens.	Comp.
A - B	96	- 68	D - E	127	- 47
B - C	96	- 36	E - F	96	- 36
C - D	127	- 47	F - G	96	- 68

Maximum Bot Chord Forces Per Ply (lbs)

Chords	Tens.	Comp.	Chords	Tens.	Comp.
A - L	73	- 74	J - I	77	- 83
L - K	76	- 80	I - H	76	- 80
K - J	77	- 83	H - G	73	- 74

Maximum Web Forces Per Ply (lbs)

Webs	Tens.	Comp.	Webs	Tens.	Comp.
B - L	115	- 238	I - E	166	- 282
C - K	166	- 282	H - F	115	- 238
D - J	0	- 240			

Loading Criteria (psf)
TCLL: 20.00
TCDL: 10.00
BCLL: 0.00
BCDL: 10.00
Des Ld: 40.00
NCBCLL: 10.00 Soffit: 2.00
Load Duration: 1.15
Spacing: 24.0 "

Wind Criteria
Wind Std: ASCE 7-16 Speed: 120 mph
Enclosure: Closed Risk Category: II
TCDL: 5.0 psf BCDL: 5.0 psf EXP: C
Mean Height: 15.00 ft Kzt: NA
MWFRS Parallel Dist: > 2h
C&C Dist a: 3.00 ft
Loc. from endwall: not in 9.00 ft
GCpi: 0.18
Wind Duration: 1.60

Snow Criteria
(Pg,Pf in PSF)
Pg: 15.0 Ct: 1.1
Pf: 11.6
CAT: II Ce: 1.0
Lu: - Cs: 1.00
Snow Duration: 1.15

Building Code:
IBC 2021 Res
TPI Std: 2014
Rep Fac: Yes
FT/RT:20(0)/10(0)
Plate Type:
WAVE

Defl/CSI Criteria

PP Deflection in	loc	L/defl	L/#		
VERT(LL): 0.006	A	999	240	Max TC CSI:	0.208
VERT(CL): 0.013	A	999	240	Max BC CSI:	0.120
HORZ(LL): -0.002	G	-	-	Max Web CSI:	0.137
HORZ(TL): 0.004	G	-	-	Creep Factor: 2.0	

Mfg Specified Camber:

VIEW Ver: 21.01.03A.0805.14

Lumber
Top chord: 2x4 SPF #1/#2;
Bot chord: 2x4 SPF #1/#2;
Webs: 2x4 SPF #1/#2;

Loading
Bottom chord checked for 10.00 psf non-concurrent live load.
Truss designed for unbalanced snow loads.

Wind
Wind loads based on MWFRS with additional C&C member design.
Wind loading based on both gable and hip roof types.

Additional Notes
See DWG VALTN160118 for valley details.

****WARNING**** READ AND FOLLOW ALL NOTES ON THIS DRAWING!
****IMPORTANT**** FURNISH THIS DRAWING TO ALL CONTRACTORS INCLUDING THE INSTALLERS

Trusses require extreme care in fabricating, handling, shipping, installing and bracing. Refer to and follow the latest edition of BCSI (Building Component Safety Information, by TPI and SBCA) for safety practices prior to performing these functions. Installers shall provide temporary bracing per BCSI. Unless noted otherwise, top chord shall have properly attached structural sheathing and bottom chord shall have a properly attached rigid ceiling. Locations shown for permanent lateral restraint of webs shall have bracing installed per BCSI sections B3, B7, or B10, as applicable. Apply plates to each face of truss and position as shown above and on the Joint Details, unless noted otherwise. Refer to drawings 160A-Z for standard plate positions.

Alpine, a division of ITW Building Components Group Inc. shall not be responsible for any deviation from this drawing, any failure to build the truss in conformance with ANSI/TPI 1, or for handling, shipping, installation and bracing of trusses. A seal on this drawing or cover page listing this drawing, indicates acceptance of professional engineering responsibility solely for the design shown. The suitability and use of this drawing for any structure is the responsibility of the Building Designer per ANSI/TPI 1 Sec.2.

For more information see these web sites: Alpine: alpineitw.com; TPI: tpinst.org; SBCA: sbcindustry.com; ICC: iccsafe.org; AWC: awc.org

SEQN: 10047 / T13 / VAL FROM:	Ply: 1 Qty: 1 Wgt: 77.0 lbs	**Job Number:** Q36970 **Truss Label:** V2	DRW: ... / ... 01/17/2022

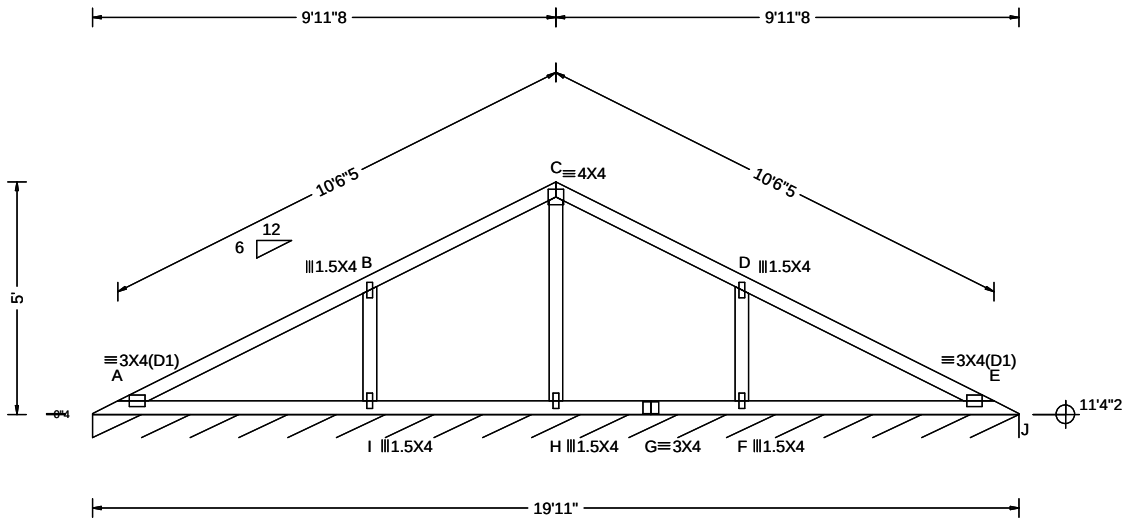

▲Maximum Reactions (lbs), or *=PLF

Loc	Gravity R+	/ R-	/ Rh	Non-Gravity / Rw	/ U	/ RL
J*	82	/-	/-	/42	/-	/5

Wind reactions based on MWFRS
J Brg Width = 239 Min Req = -
Bearing A is a rigid surface.

Maximum Top Chord Forces Per Ply (lbs)

Chords	Tens.	Comp.	Chords	Tens.	Comp.
A - B	302	- 78	C - D	265	0
B - C	265	0	D - E	302	- 78

Maximum Bot Chord Forces Per Ply (lbs)

Chords	Tens.	Comp.	Chords	Tens.	Comp.
A - I	107	- 195	G - F	113	- 203
I - H	112	- 203	F - E	108	- 195
H - G	112	- 203			

Maximum Web Forces Per Ply (lbs)

Webs	Tens.	Comp.	Webs	Tens.	Comp.
B - I	206	- 353	F - D	205	- 352
C - H	48	- 374			

Loading Criteria (psf)
TCLL: 20.00
TCDL: 10.00
BCLL: 0.00
BCDL: 10.00
Des Ld: 40.00
NCBCLL: 10.00 Soffit: 2.00
Load Duration: 1.15
Spacing: 24.0 "

Wind Criteria
Wind Std: ASCE 7-16 Speed: 120 mph
Enclosure: Closed Risk Category: II
TCDL: 5.0 psf BCDL: 5.0 psf EXP: C
Mean Height: 15.00 ft Kzt: NA
MWFRS Parallel Dist: > 2h
C&C Dist a: 3.00 ft
Loc. from endwall: not in 9.00 ft
GCpi: 0.18
Wind Duration: 1.60

Snow Criteria
(Pg,Pf in PSF)
Pg: 15.0 Ct: 1.1
Pf: 11.6
CAT: II Ce: 1.0
Lu: - Cs: 1.00
Snow Duration: 1.15

Building Code:
IBC 2021 Res
TPI Std: 2014
Rep Fac: Yes
FT/RT:20(0)/10(0)
Plate Type:
WAVE

Defl/CSI Criteria

PP Deflection in	loc	L/defl	L/#		
VERT(LL): 0.021	A	999	240	Max TC CSI:	0.438
VERT(CL): 0.044	A	999	240	Max BC CSI:	0.242
HORZ(LL): 0.008	A	-	-	Max Web CSI:	0.146
HORZ(TL): 0.016	A	-	-	Creep Factor: 2.0	

Mfg Specified Camber:

VIEW Ver: 21.01.03A.0805.14

Lumber
Top chord: 2x4 SPF #1/#2;
Bot chord: 2x4 SPF #1/#2;
Webs: 2x4 SPF #1/#2;

Loading
Bottom chord checked for 10.00 psf [redacted] concurrent live load.
Truss designed for unbalanced snow loads.

Wind
Wind loads based on MWFRS with additional C&C member design.
Wind loading based on both gable and hip roof types.

Additional Notes
See DWG VALTN160118 for valley details.

****WARNING**** READ AND FOLLOW ALL NOTES ON THIS DRAWING!
****IMPORTANT**** FURNISH THIS DRAWING TO ALL CONTRACTORS INCLUDING THE INSTALLERS

Trusses require extreme care in fabricating, handling, shipping, installing and bracing. Refer to and follow the latest edition of BCSI (Building Component Safety Information, by TPI and SBCA) for safety practices prior to performing these functions. Installers shall provide temporary bracing per BCSI. Unless noted otherwise, top chord shall have properly attached structural sheathing and bottom chord shall have a properly attached rigid ceiling. Locations shown for permanent lateral restraint of webs shall have bracing installed per BCSI sections B3, B7, or B10, as applicable. Apply plates to each face of truss and position as shown above and on the Joint Details, unless noted otherwise. Refer to drawings 160A-Z for standard plate positions.

Alpine, a division of ITW Building Components Group Inc. shall not be responsible for any deviation from this drawing, any failure to build the truss in conformance with ANSI/TPI 1, or for handling, shipping, installation and bracing of trusses. A seal on this drawing or cover page listing this drawing, indicates acceptance of professional engineering responsibility solely for the design shown. The suitability and use of this drawing for any structure is the responsibility of the Building Designer per ANSI/TPI 1 Sec.2.

For more information see these web sites: Alpine: alpineitw.com; TPI: tpinst.org; SBCA: sbcindustry.com; ICC: iccsafe.org; AWC: awc.org

SEQN: 10057 / T12 / VAL FROM:	Ply: 1 Qty: 1 Wgt: 61.6 lbs	**Job Number:** Q36970 **Truss Label:** V3	DRW: ... / ... 01/17/2022

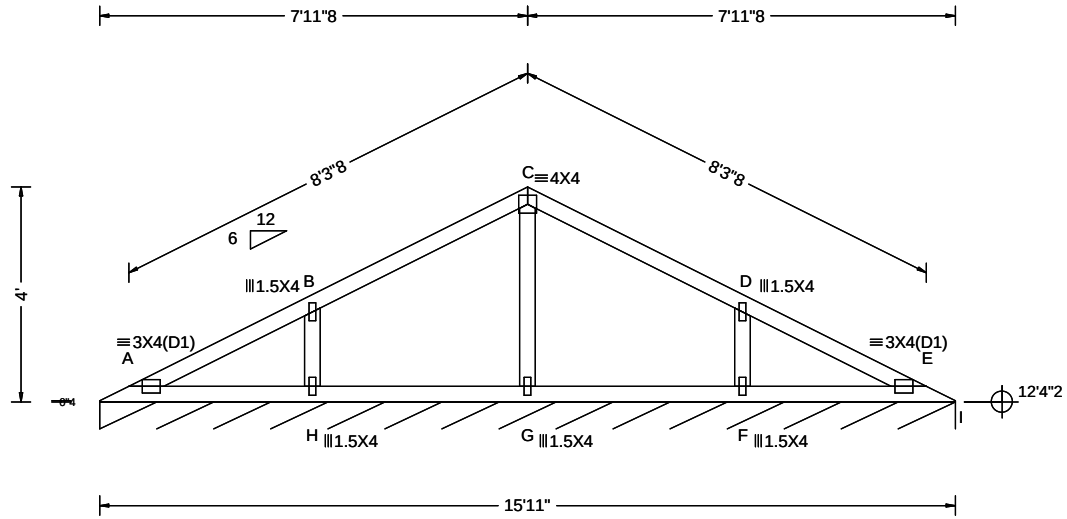

▲ Maximum Reactions (lbs), or *=PLF

Loc	Gravity R+	/ R-	/ Rh	Non-Gravity / Rw	/ U	/ RL
I*	82	/-	/-	/42	/-	/5

Wind reactions based on MWFRS
I Brg Width = 191 Min Req = -
Bearing A is a rigid surface.

Maximum Top Chord Forces Per Ply (lbs)

Chords	Tens.	Comp.	Chords	Tens.	Comp.
A - B	104	- 34	C - D	101	- 44
B - C	101	- 44	D - E	104	- 52

Maximum Bot Chord Forces Per Ply (lbs)

Chords	Tens.	Comp.	Chords	Tens.	Comp.
A - H	51	- 46	G - F	58	- 53
H - G	58	- 53	F - E	51	- 51

Maximum Web Forces Per Ply (lbs)

Webs	Tens.	Comp.	Webs	Tens.	Comp.
B - H	198	- 284	F - D	199	- 284
C - G	54	- 250			

Loading Criteria (psf)
TCLL: 20.00
TCDL: 10.00
BCLL: 0.00
BCDL: 10.00
Des Ld: 40.00
NCBCLL: 10.00 Soffit: 2.00
Load Duration: 1.15
Spacing: 24.0 "

Wind Criteria
Wind Std: ASCE 7-16 Speed: 120 mph
Enclosure: Closed Risk Category: II
TCDL: 5.0 psf BCDL: 5.0 psf EXP: C
Mean Height: 15.00 ft Kzt: NA
MWFRS Parallel Dist: h to 2h
C&C Dist a: 3.00 ft
Loc. from endwall: not in 9.00 ft
GCpi: 0.18
Wind Duration: 1.60

Snow Criteria
(Pg,Pf in PSF)
Pg: 15.0 Ct: 1.1
Pf: 11.6
CAT: II Ce: 1.0
Lu: - Cs: 1.00
Snow Duration: 1.15

Building Code:
IBC 2021 Res
TPI Std: 2014
Rep Fac: Yes
FT/RT:20(0)/10(0)
Plate Type:
WAVE

Defl/CSI Criteria

PP Deflection in	loc	L/defl	L/#		
VERT(LL): 0.005	A	999	240	Max TC CSI:	0.269
VERT(CL): 0.010	A	999	240	Max BC CSI:	0.117
HORZ(LL): -0.002	E	-	-	Max Web CSI:	0.064
HORZ(TL): 0.004	E	-	-	Creep Factor: 2.0	

Mfg Specified Camber:

VIEW Ver: 21.01.03A.0805.14

Lumber
Top chord: 2x4 SPF #1/#2;
Bot chord: 2x4 SPF #1/#2;
Webs: 2x4 SPF #1/#2;

Loading
Bottom chord checked for 10.00 psf non-concurrent live load.
Truss designed for unbalanced snow loads.

Wind
Wind loads based on MWFRS with additional C&C member design.
Wind loading based on both gable and hip roof types.

Additional Notes
See DWG VALTN160118 for valley details.

****WARNING**** READ AND FOLLOW ALL NOTES ON THIS DRAWING!
****IMPORTANT**** FURNISH THIS DRAWING TO ALL CONTRACTORS INCLUDING THE INSTALLERS

Trusses require extreme care in fabricating, handling, shipping, installing and bracing. Refer to and follow the latest edition of BCSI (Building Component Safety Information, by TPI and SBCA) for safety practices prior to performing these functions. Installers shall provide temporary bracing per BCSI. Unless noted otherwise, top chord shall have properly attached structural sheathing and bottom chord shall have a properly attached rigid ceiling. Locations shown for permanent lateral restraint of webs shall have bracing installed per BCSI sections B3, B7, or B10, as applicable. Apply plates to each face of truss and position as shown above and on the Joint Details, unless noted otherwise. Refer to drawings 160A-Z for standard plate positions.

Alpine, a division of ITW Building Components Group Inc. shall not be responsible for any deviation from this drawing, any failure to build the truss in conformance with ANSI/TPI 1, or for handling, shipping, installation and bracing of trusses. A seal on this drawing or cover page listing this drawing, indicates acceptance of professional engineering responsibility solely for the design shown. The suitability and use of this drawing for any structure is the responsibility of the Building Designer per ANSI/TPI 1 Sec.2.

For more information see these web sites: Alpine: alpineitw.com; TPI: tpinst.org; SBCA: sbcindustry.com; ICC: iccsafe.org; AWC: awc.org

SEQN: 10035 / T11 / VAL FROM:	Ply: 1 Qty: 1 Wgt: 40.6 lbs	**Job Number:** Q36970 **Truss Label:** V4	DRW: ... / ... 01/17/2022

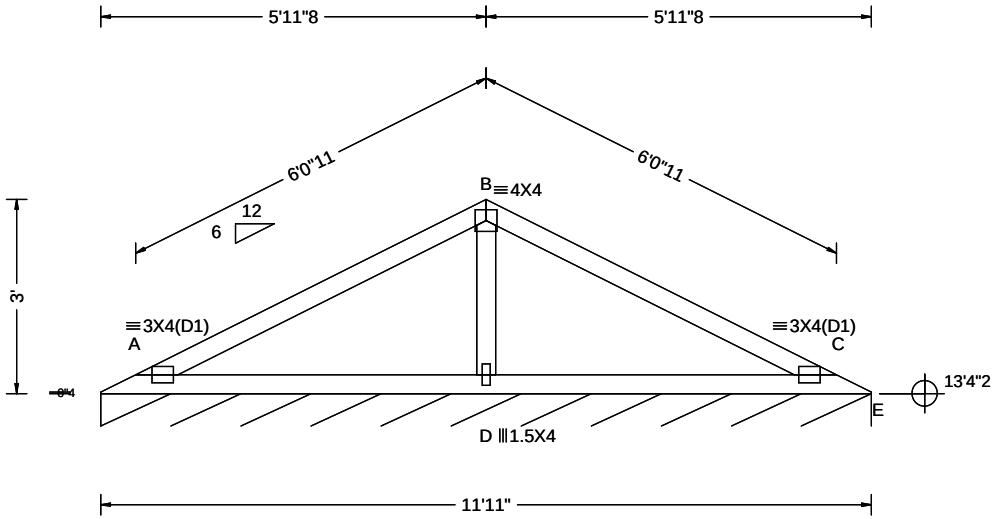

▲ Maximum Reactions (lbs), or *=PLF

Loc	Gravity R+	/ R-	/ Rh	Non-Gravity / Rw	/ U	/ RL
E*	82	/-	/-	/41	/-	/5

Wind reactions based on MWFRS
E Brg Width = 143 Min Req = -
Bearing A is a rigid surface.

Maximum Top Chord Forces Per Ply (lbs)

Chords	Tens.	Comp.	Chords	Tens.	Comp.
A - B	506	- 207	B - C	506	- 217

Maximum Bot Chord Forces Per Ply (lbs)

Chords	Tens.	Comp.	Chords	Tens.	Comp.
A - D	253	- 395	D - C	253	- 395

Maximum Web Forces Per Ply (lbs)

Webs	Tens.	Comp.
B - D	358	- 683

Loading Criteria (psf)
TCLL: 20.00
TCDL: 10.00
BCLL: 0.00
BCDL: 10.00
Des Ld: 40.00
NCBCLL: 10.00 Soffit: 2.00
Load Duration: 1.15
Spacing: 24.0 "

Wind Criteria
Wind Std: ASCE 7-16 Speed: 120 mph
Enclosure: Closed Risk Category: II
TCDL: 5.0 psf BCDL: 5.0 psf EXP: C
Mean Height: 15.00 ft Kzt: NA
MWFRS Parallel Dist: h to 2h
C&C Dist a: 3.00 ft
Loc. from endwall: not in 9.00 ft
GCpi: 0.18
Wind Duration: 1.60

Snow Criteria
(Pg,Pf in PSF)
Pg: 15.0 Ct: 1.1
Pf: 11.6
CAT: II Ce: 1.0
Lu: - Cs: 1.00
Snow Duration: 1.15

Building Code:
IBC 2021 Res
TPI Std: 2014
Rep Fac: Yes
FT/RT:20(0)/10(0)
Plate Type:
WAVE

Defl/CSI Criteria

PP Deflection in	loc	L/defl	L/#		
VERT(LL): 0.025	A	999	240	Max TC CSI:	0.490
VERT(CL): 0.059	A	999	240	Max BC CSI:	0.344
HORZ(LL): -0.010	C	-	-	Max Web CSI:	0.115
HORZ(TL): 0.023	C	-	-	Creep Factor: 2.0	

Mfg Specified Camber:

VIEW Ver: 21.01.03A.0805.14

Lumber
Top chord: 2x4 SPF #1/#2;
Bot chord: 2x4 SPF #1/#2;
Webs: 2x4 SPF #1/#2;

Loading
Bottom chord checked for 10.00 psf non-concurrent live load.
Truss designed for unbalanced snow loads.

Wind
Wind loads based on MWFRS with additional C&C member design.
Wind loading based on both gable and hip roof types.

Additional Notes
See DWG VALTN160118 for valley details.

****WARNING**** READ AND FOLLOW ALL NOTES ON THIS DRAWING!
****IMPORTANT**** FURNISH THIS DRAWING TO ALL CONTRACTORS INCLUDING THE INSTALLERS

Trusses require extreme care in fabricating, handling, shipping, installing and bracing. Refer to and follow the latest edition of BCSI (Building Component Safety Information, by TPI and SBCA) for safety practices prior to performing these functions. Installers shall provide temporary bracing per BCSI. Unless noted otherwise, top chord shall have properly attached structural sheathing and bottom chord shall have a properly attached rigid ceiling. Locations shown for permanent lateral restraint of webs shall have bracing installed per BCSI sections B3, B7, or B10, as applicable. Apply plates to each face of truss and position as shown above and on the Joint Details, unless noted otherwise. Refer to drawings 160A-Z for standard plate positions.

Alpine, a division of ITW Building Components Group Inc. shall not be responsible for any deviation from this drawing, any failure to build the truss in conformance with ANSI/TPI 1, or for handling, shipping, installation and bracing of trusses. A seal on this drawing or cover page listing this drawing, indicates acceptance of professional engineering responsibility solely for the design shown. The suitability and use of this drawing for any structure is the responsibility of the Building Designer per ANSI/TPI 1 Sec.2.

For more information see these web sites: Alpine: alpineitw.com; TPI: tpinst.org; SBCA: sbcindustry.com; ICC: iccsafe.org; AWC: awc.org

SEQN: 10049 / T10 / VAL FROM:	Ply: 1 Qty: 1 Wgt: 25.2 lbs	**Job Number:** Q36970 **Truss Label:** V5	DRW: ... / ... 01/17/2022

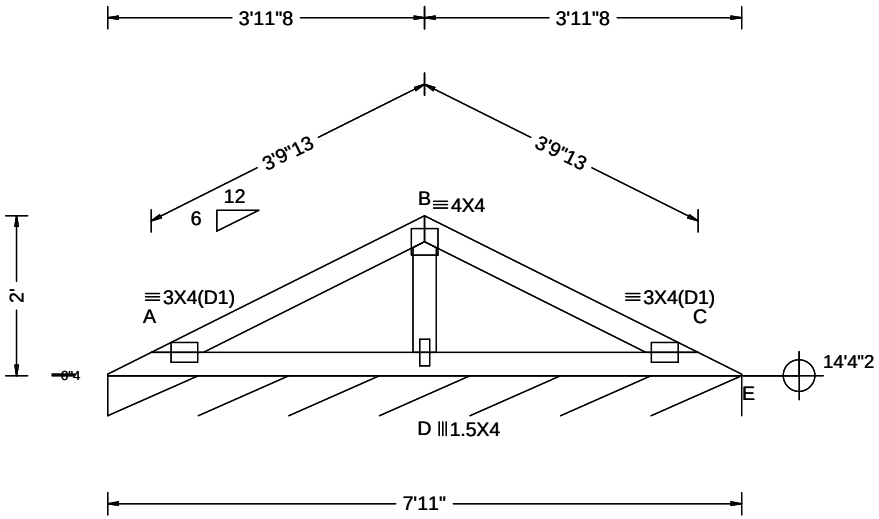

Loading Criteria (psf)	**Wind Criteria**	**Snow Criteria**	Building Code:	**Defl/CSI Criteria**
TCLL: 20.00 TCDL: 10.00 BCLL: 0.00 BCDL: 10.00 Des Ld: 40.00 NCBCLL: 10.00 Soffit: 2.00 Load Duration: 1.15 Spacing: 24.0 "	Wind Std: ASCE 7-16 Speed: 120 mph Enclosure: Closed Risk Category: II TCDL: 5.0 psf BCDL: 5.0 psf EXP: C Mean Height: 15.49 ft Kzt: NA MWFRS Parallel Dist: h to 2h C&C Dist a: 3.00 ft Loc. from endwall: not in 9.00 ft GCpi: 0.18 Wind Duration: 1.60	(Pg,Pf in PSF) Pg: 15.0 Ct: 1.1 Pf: 11.6 CAT: II Ce: 1.0 Lu: - Cs: 1.00 Snow Duration: 1.15	IBC 2021 Res TPI Std: 2014 Rep Fac: Yes FT/RT:20(0)/10(0) Plate Type: WAVE	PP Deflection in loc L/defl L/# VERT(LL): 0.007 A 999 240 Max TC CSI: 0.190 VERT(CL): 0.018 A 999 240 Max BC CSI: 0.139 HORZ(LL): -0.003 C - - Max Web CSI: 0.047 HORZ(TL): 0.007 C - - Creep Factor: 2.0 Mfg Specified Camber: VIEW Ver: 21.01.03A.0805.14

Lumber

Top chord: 2x4 SPF #1/#2;
Bot chord: 2x4 SPF #1/#2;
Webs: 2x4 SPF #1/#2;

Loading

Bottom chord checked for 10.00 psf non-concurrent live load.

Truss designed for unbalanced snow loads.

Wind

Wind loads based on MWFRS with additional C&C member design.

Wind loading based on both gable and hip roof types.

Additional Notes

See DWG VALTN160118 for valley details.

▲Maximum Reactions (lbs), or *=PLF

Loc	Gravity R+	/ R-	/ Rh	Non-Gravity / Rw	/ U	/ RL
E*	82	/-	/-	/40	/-	/5

Wind reactions based on MWFRS
E Brg Width = 95.0 Min Req = -
Bearing A is a rigid surface.

Maximum Top Chord Forces Per Ply (lbs)

Chords	Tens.	Comp.	Chords	Tens.	Comp.
A - B	226	- 101	B - C	226	- 116

Maximum Bot Chord Forces Per Ply (lbs)

Chords	Tens.	Comp.	Chords	Tens.	Comp.
A - D	152	- 166	D - C	152	- 166

Maximum Web Forces Per Ply (lbs)

Webs	Tens.	Comp.
B - D	233	- 348

****WARNING**** READ AND FOLLOW ALL NOTES ON THIS DRAWING!
****IMPORTANT**** FURNISH THIS DRAWING TO ALL CONTRACTORS INCLUDING THE INSTALLERS

Trusses require extreme care in fabricating, handling, shipping, installing and bracing. Refer to and follow the latest edition of BCSI (Building Component Safety Information, by TPI and SBCA) for safety practices prior to performing these functions. Installers shall provide temporary bracing per BCSI. Unless noted otherwise, top chord shall have properly attached structural sheathing and bottom chord shall have a properly attached rigid ceiling. Locations shown for permanent lateral restraint of webs shall have bracing installed per BCSI sections B3, B7, or B10, as applicable. Apply plates to each face of truss and position as shown above and on the Joint Details, unless noted otherwise. Refer to drawings 160A-Z for standard plate positions.

Alpine, a division of ITW Building Components Group Inc. shall not be responsible for any deviation from this drawing, any failure to build the truss in conformance with ANSI/TPI 1, or for handling, shipping, installation and bracing of trusses. A seal on this drawing or cover page listing this drawing, indicates acceptance of professional engineering responsibility solely for the design shown. The suitability and use of this drawing for any structure is the responsibility of the Building Designer per ANSI/TPI 1 Sec.2.

For more information see these web sites: Alpine: alpineitw.com; TPI: tpinst.org; SBCA: sbcindustry.com; ICC: iccsafe.org; AWC: awc.org

SEQN: 10061 / T9 / VAL FROM:	Ply: 1 Qty: 1 Wgt: 11.2 lbs	**Job Number:** Q36970 **Truss Label:** V6	DRW: ... / ... 01/17/2022

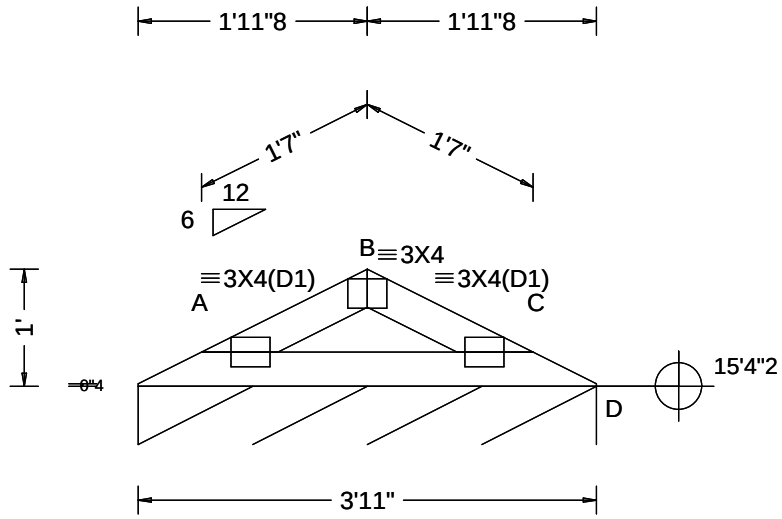

Loading Criteria (psf)
TCLL: 20.00
TCDL: 10.00
BCLL: 0.00
BCDL: 10.00
Des Ld: 40.00
NCBCLL: 10.00 Soffit: 2.00
Load Duration: 1.15
Spacing: 24.0 "

Wind Criteria
Wind Std: ASCE 7-16 Speed: 120 mph
Enclosure: Closed Risk Category: II
TCDL: 5.0 psf BCDL: 5.0 psf EXP: C
Mean Height: 15.99 ft Kzt: NA
MWFRS Parallel Dist: h to 2h
C&C Dist a: 3.00 ft
Loc. from endwall: not in 9.00 ft
GCpi: 0.18
Wind Duration: 1.60

Snow Criteria
(Pg,Pf in PSF)
Pg: 15.0 Ct: 1.1
Pf: 11.6
CAT: II Ce: 1.0
Lu: - Cs: 1.00
Snow Duration: 1.15

Building Code:
IBC 2021 Res
TPI Std: 2014
Rep Fac: Yes
FT/RT:20(0)/10(0)
Plate Type:
WAVE

Defl/CSI Criteria

PP Deflection in	loc	L/defl	L/#		
VERT(LL): 0.004	C	999	240	Max TC CSI:	0.066
VERT(CL): 0.007	C	999	240	Max BC CSI:	0.096
HORZ(LL): -0.001	A	-	-	Max Web CSI:	0.000
HORZ(TL): 0.003	A	-	-	Creep Factor: 2.0	

Mfg Specified Camber:

VIEW Ver: 21.01.03A.0805.14

Lumber
Top chord: 2x4 SPF #1/#2;
Bot chord: 2x4 SPF #1/#2;

Loading
Bottom chord checked for 10.00 psf non-concurrent live load.
Truss designed for unbalanced snow loads.

Wind
Wind loads based on MWFRS with additional C&C member design.
Wind loading based on both gable and hip roof types.

Additional Notes
See DWG VALTN160118 for valley details.

▲Maximum Reactions (lbs), or *=PLF

Loc	Gravity R+	/ R-	/ Rh	Non-Gravity / Rw	/ U	/ RL
D*	82	/-	/-	/37	/-	/4

Wind reactions based on MWFRS
D Brg Width = 47.0 Min Req = -
Bearing A is a rigid surface.

Maximum Top Chord Forces Per Ply (lbs)

Chords	Tens.	Comp.	Chords	Tens.	Comp.
A - B	118	- 179	B - C	116	- 179

Maximum Bot Chord Forces Per Ply (lbs)

Chords	Tens.	Comp.
A - C	174	- 91

****WARNING**** READ AND FOLLOW ALL NOTES ON THIS DRAWING!
****IMPORTANT**** FURNISH THIS DRAWING TO ALL CONTRACTORS INCLUDING THE INSTALLERS

Trusses require extreme care in fabricating, handling, shipping, installing and bracing. Refer to and follow the latest edition of BCSI (Building Component Safety Information, by TPI and SBCA) for safety practices prior to performing these functions. Installers shall provide temporary bracing per BCSI. Unless noted otherwise, top chord shall have properly attached structural sheathing and bottom chord shall have a properly attached rigid ceiling. Locations shown for permanent lateral restraint of webs shall have bracing installed per BCSI sections B3, B7, or B10, as applicable. Apply plates to each face of truss and position as shown above and on the Joint Details, unless noted otherwise. Refer to drawings 160A-Z for standard plate positions.

Alpine, a division of ITW Building Components Group Inc. shall not be responsible for any deviation from this drawing, any failure to build the truss in conformance with ANSI/TPI 1, or for handling, shipping, installation and bracing of trusses. A seal on this drawing or cover page listing this drawing, indicates acceptance of professional engineering responsibility solely for the design shown. The suitability and use of this drawing for any structure is the responsibility of the Building Designer per ANSI/TPI 1 Sec.2.

For more information see these web sites: Alpine: alpineitw.com; TPI: tpinst.org; SBCA: sbcindustry.com; ICC: iccsafe.org; AWC: awc.org